SIEMENS

Extractor hood

siemens-home.bsh-group.com/welcome

en Instructions for installation and use

Register your product online

Table of contents

INSTRUCTION MANUAL 2
Intended use 2
Important safety information 3
Environmental protection 5
Operating modes 5
Operating the appliance 6
Connecting to a hob 10
Home Connect 11
Cleaning and maintenance 13
Trouble shooting 15
Customer service 15
INSTALLATION INSTRUCTIONS 17
Important safety information 18
General information 20
Installation 21

INSTRUCTION MANUAL

Additional information on products, accessories, replacement parts and services can be found at **siemens** and in the online shop **banyo.co.uk**

Intended use

Read these instructions carefully. Only then will you be able to operate your appliance safely and correctly. Retain the instruction manual and installation instructions for future use or for subsequent owners.

The appliance can only be used safely if it is correctly installed according to the safety instructions. The installer is responsible for ensuring that the appliance works perfectly at its installation location.

This appliance is intended for domestic use and the household environment only. The appliance is not intended for use outside. Do not leave the appliance unattended during operation. The manufacturer is not liable for damage which is caused by improper use or incorrect operation.

This appliance is intended for use up to a maximum height of 2000 metres above sea level.

This appliance may be used by children over the age of 8 years old and by persons with reduced physical, sensory or mental capacity or by persons with a lack of experience or knowledge if they are supervised by someone who is responsible for their safety, or have been instructed in how to use the appliance safely and have understood the risks involved in not using it properly.

Children must not play with the appliance.Cleaning and user maintenance must not be performed by children unless they are over 15 years of age and are supervised.

Keep children below the age of 8 years old at a safe distance from the appliance and power cable.

Check the appliance for damage after unpacking it. Do not connect the appliance if it has been damaged in transport.

This appliance is not intended for operation with an external clock timer or a remote control.

Important safety information

Warning
Danger of suffocation!
Packaging material is dangerous to children. Never allow children to play with packaging material.

Warning
Danger of death!
Risk of poisoning from flue gases that are drawn back in.

Always ensure adequate fresh air in the room if the appliance is being operated in exhaust air mode at the same time as room air-dependent heat-producing appliance is being operated.

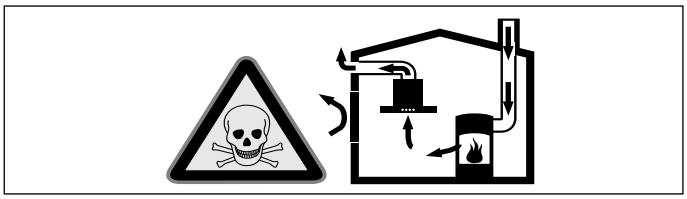

Room air-dependent heat-producing appliances (e.g. gas, oil, wood or coal-operated heaters, continuous flow heaters or water heaters) obtain combustion air from the room in which they are installed and discharge the exhaust gases into the open air through an exhaust gas system (e.g. a chimney).

In combination with an activated vapour extractor hood, room air is extracted from the kitchen and neighbouring rooms - a partial vacuum is produced if not enough fresh air is supplied. Toxic gases from the chimney or the extraction shaft are sucked back into the living space.

- Adequate incoming air must therefore always be ensured.
- An incoming/exhaust air wall box alone will not ensure compliance with the limit.

Safe operation is possible only when the partial vacuum in the place where the heat-producing appliance is installed does not exceed 4 Pa (0.04 mbar). This can be achieved when the air needed for combustion is able to enter through openings that cannot be sealed, for example in doors, windows, incoming/exhaust air wall boxes or by other technical means.

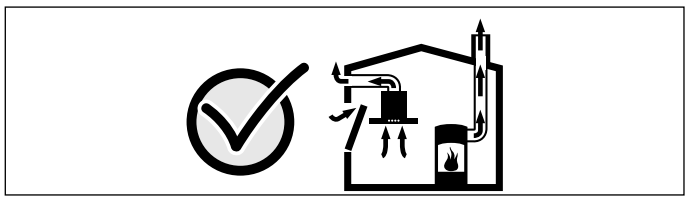

In any case, consult your responsible Master Chimney Sweep. He is able to assess the house's entire ventilation setup and will suggest the suitable ventilation measures to you.

Unrestricted operation is possible if the vapour extractor hood is operated exclusively in the circulating-air mode.

Warning
Risk of fire!

- Fatty deposits in the grease filter may catch fire. Regularly clean the grease filter. Never operate the appliance without a grease filter.
- Grease deposits in the grease filter may catch fire. Never work with naked flames close to the appliance (e.g. flambéing). Do not install the appliance near a heat-producing appliance for solid fuel (e.g. wood or coal) unless a closed, non-removable cover is available. There must be no flying sparks.
- Hot oil and fat can ignite very quickly. Never leave hot fat or oil unattended. Never use water to put out burning oil or fat. Switch off the hotplate. Extinguish flames carefully using a lid, fire blanket or something similar.
- When gas burners are in operation without any cookware placed on them, they can build up a lot of heat. A ventilation appliance installed above the cooker may become damaged or catch fire. Only operate the gas burners with cookware on them.
- Operating several gas burners at the same time gives rise to a great deal of heat. A ventilation appliance installed above the cooker may become damaged or catch fire. Never operate two gas burners simultaneously on the highest flame for longer than 15 minutes. One large burner of more than 5 kW (wok) is equivalent to the power of two gas burners.

⚠ Warning
Risk of burns!
The accessible parts become very hot when in operation. Never touch hot parts. Keep children at a safe distance.

⚠ Warning
Risk of injury!
- Components inside the appliance may have sharp edges. Wear protective gloves.
- Items placed on the appliance may fall down. Do not place any objects on the appliance.
- The light emitted by LED lights is very dazzling, and can damage the eyes (risk group 1). Do not look directly into the switched on LED lights for longer than 100 seconds.

⚠ Warning
Risk of injury!
Risk of trapping body parts when opening and closing the glass front. Do not reach into the area behind the glass panel, and keep your fingers away from the hinges.

⚠ Warning
Hazard due to magnetism!
Permanent magnets are inserted in the appliance front. They may affect electronic implants, e.g. heart pacemakers or insulin pumps. Wearers of electronic implants must stay at least 10 cm away from the appliance front.

⚠ Warning
Risk of electric shock!
- A defective appliance may cause electric shock. Never switch on a defective appliance. Unplug the appliance from the mains or switch off the circuit breaker in the fuse box. Contact the after-sales service.
- Incorrect repairs are dangerous. Repairs may only be carried out and damaged power cables replaced by one of our trained after-sales technicians. If the appliance is defective, unplug the appliance from the mains or switch off the circuit breaker in the fuse box. Contact the after-sales service.
- Do not use any high-pressure cleaners or steam cleaners, which can result in an electric shock.

Causes of damage

Caution!
Risk of damage due to corrosion. Always switch on the appliance while cooking to avoid condensation. Condensate can produce corrosion damage.

Always replace faulty bulbs to prevent the remaining bulbs from overloading.

Risk of damage due to ingress of humidity into the electronic circuitry. Never clean operator controls with a wet cloth.

Surface damage due to incorrect cleaning. Clean stainless steel surfaces in the direction of the grain only. Do not use any stainless steel cleaners for operator controls.

Surface damage due to strong or abrasive cleaning agents. Never use strong and abrasive cleaning agents.

Risk of damage from returning condensate. Install the exhaust duct in such a way that it falls away from the appliance slightly (1° slope).

Risk of damage as a result of incorrect loading of design elements. Do not pull design elements.Do not place objects on the design elements or hang objects from them.

Environmental protection

Your new appliance is particularly energy-efficient. Here you can find tips on how to save even more energy when using the appliance, and how to dispose of your appliance properly.

Saving energy

- During cooking, ensure that there is a sufficient supply of air so that the extractor hood can work efficiently and with a low level of operating noise.
- Adjust the fan speed to the intensity of the cooking fumes. Only use intensive mode where this is required. A lower fan speed means that less energy is consumed.
- If there are intensive cooking fumes, select a higher fan speed in good time. If cooking fumes have already spread in the kitchen, the extractor hood must be operated for longer.
- Switch off the extractor hood if you no longer require it.
- Switch off the lighting if you no longer require it.
- Clean and, if required, replace the filter at regular intervals in order to increase the effectiveness of the ventilation system and to prevent the risk of fire.

Environmentally-friendly disposal

Dispose of packaging in an environmentally-friendly manner.

This appliance is labelled in accordance with European Directive 2012/19/EU concerning used electrical and electronic appliances (waste electrical and electronic equipment - WEEE). The guideline determines the framework for the return and recycling of used appliances as applicable throughout the EU.

Operating modes

Exhaust air mode

The air which is drawn in is cleaned by the grease filters and conveyed to the exterior by a pipe system.

Note: The exhaust air must not be conveyed into a functioning smoke or exhaust gas flue or into a shaft which is used to ventilate installation rooms which contain heat-producing appliances.

- Before conveying the exhaust air into a non-functioning smoke or exhaust gas flue, obtain the consent of the heating engineer responsible.
- If the exhaust air is conveyed through the outer wall, a telescopic wall box should be used.

Circulating-air mode

The air which is drawn in is cleaned by the grease filters and an activated carbon filter and conveyed back into the kitchen.

Note: To bind odours in circulating-air mode, you must install an activated carbon filter. The different options for operating the appliance in circulating-air mode can be found in the brochure. Alternatively, ask your dealer. The required accessories are available from specialist retailers, from customer service or from the Online Shop.

Operating the appliance

These instructions apply to several appliance variants. It is possible that individual features are described which do not apply to your appliance.

Control panel model 1

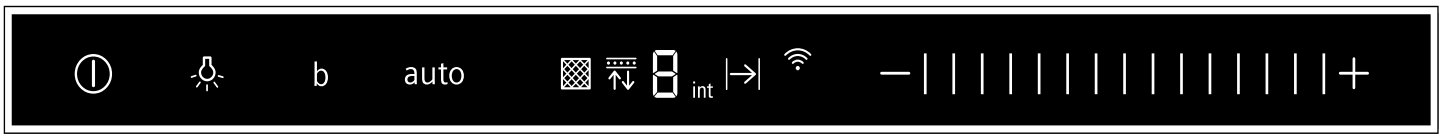

Symbol	Explanation
⏻	Fan on/off
💡	Light on/off/dimming
b	Intensive mode
auto	Automatic mode
–	Decrease fan setting/fan run-on
| | |	Control panel
+	Increase fan setting

Display	Explanation
▩	Metal grease filter saturation indicator
↓↑	Activated charcoal filter saturation indicator
1-3	Fan settings
int	Intensive mode
|→|	Fan run-on
auto	Automatic mode
📶	Home Connect

Setting the fan

Switching on

- Touch the ⏻ symbol.
  The fan starts at setting 2.
- Slide your finger across the III settings range to change the fan speed.

Switching off

Touch the ⏻ symbol.

Note: Switch on the extractor hood when you start cooking and switch it off again several minutes after you have finished cooking. This is the most effective way of removing the kitchen fumes.

Intensive setting

You can use the intensive setting if there is a large build-up of odours and fumes/vapours.

Switching on

Touch the **+** symbol or slide your finger to the right across control panel III until **int** appears in the display.

Note: After approx. 6 minutes, the extractor hood automatically switches back to fan setting 3.

Switching off

If you would like to stop intensive mode before the preset time expires, slide your finger to the left across control panel III to select the fan setting you require.

Lighting

The lighting can be switched on and off independently of the fan.

Touch the 💡 symbol.

Setting the brightness

Press and hold the 💡 symbol until the desired brightness is reached.

Boost function

Switching on

Touch the **b** symbol.

Note: After approximately 20 seconds, the extractor hood automatically switches back to the fan setting that was set beforehand.

Switching off

If you want to end the Boost function before the preset time expires, touch the **b** symbol.

powerBoost position

On some appliances, the glass front can be adjusted to an intermediate position (powerBoost position). The powerBoost position can be used for eliminating particularly strong cooking smells and large amounts of steam.

Take hold of the glass front in the centre and open it carefully.

Automatic mode

Switching on

- Touch the ⏻ symbol.
  The fan will start at setting 2.
- Touch the **auto** symbol.
  The optimum fan setting is set automatically using an air quality sensor.

Switching off

Touch the **auto** or ⏻ symbol to switch off automatic mode.

The fan will switch itself off automatically if the air quality sensor detects no further change in the air quality in the room.

Automatic mode can run for a maximum of four hours.

Sensor control

In automatic mode, an air quality sensor in the extractor hood detects the intensity of the cooking and roasting odours. Depending on the air quality sensor setting, the fan will switch itself to another fan setting automatically.

Possible sensor settings:

Default sensitivity setting: 3

Lowest sensitivity setting: 1

Highest sensitivity setting: 5

If the sensor controller responds too strongly or not enough, it can be changed accordingly:

1. Touch and hold the **auto** symbol for one second when the fan is switched off. The setting will be displayed.
2. Slide your finger across control panel III to change the sensor control setting.
3. Take your finger off the **auto** symbol.

Fan run-on time

Switching on

Note: If intensive mode has been activated, the run-on function will not be available.

Touch the – symbol until I→I lights up on the display panel.

The fan will run at fan setting 1.

After approximately 10 minutes, the fan will switch itself off automatically.

Switching off

Slide your finger to the right across control panel III until a fan setting lights up in the display.

This immediately stops fan run-on.

Saturation display

If the metal grease filters or activated charcoal filter are/ is saturated, the corresponding symbols will flash once the appliance has been switched off:

- **Metal grease filter:** ▩
- **Activated charcoal filter:** ↓↑
- **Metal grease filter and activated charcoal filter:** ▩ and ↓↑

If you have not yet done so, the metal grease filters should now be cleaned or the activated charcoal filter replaced. ⟶ *"Cleaning and maintenance" on page 13*

The saturation indicators can be reset while they are flashing. Slide your finger to the left across the control panel to do so.

Switching over the display for air recirculation mode

For air recirculation mode, the electronic controller must be switched over accordingly:

- The extractor hood must be connected and switched off.
- Touch and hold the ⏻ and **auto** symbols at the same time until "2" lights up for air recirculation mode (filters that cannot be regenerated).
- Repeatedly touching and holding this button combination makes "3" light up for air recirculation mode (filters that can be regenerated).
- Repeatedly pressing and holding this button combination switches the electronic controller back over to air extraction mode ("1").

Audible signal

Switching on

Touch and hold the ⏻ and **b** symbols at the same time for approximately 3 seconds when the fan is switched off. An audible signal will sound as an acknowledgement.

When the signal tone is activated, 1 will be lit.

Switching off

Touch and hold the ⏻ and **b** symbols at the same time for approximately 3 seconds when the fan is switched off. An audible signal will sound as an acknowledgement.

When the signal tone is deactivated, 0 will be lit.

Control panel model 2

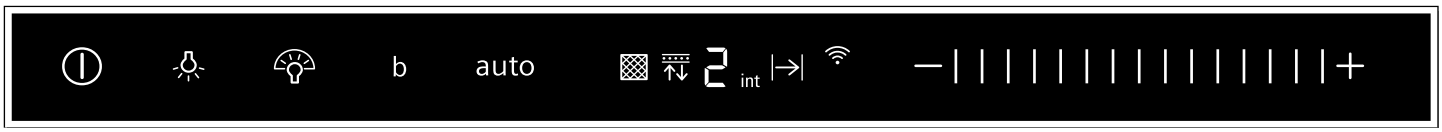

Symbol	Explanation
⏻	Fan on/off
	Light on/off/dimming
	emotionLight Pro
b	Intensive mode
auto	Automatic mode
–	Decrease fan setting
| | |	Control panel
+	Increase fan setting

Display	Explanation
	Metal grease filter saturation indicator
	Activated charcoal filter saturation indicator
1-3	Fan settings
int	Intensive mode
|→|	Fan run-on
auto	Automatic mode
	Home Connect

Setting the fan

Switching on

- Touch the ⏻ symbol.
  The fan starts at setting 2.
- Slide your finger across the III settings range to change the fan speed.

Switching off

Touch the ⏻ symbol.

Intensive setting

You can use the intensive setting if there is a large build-up of odours and fumes/vapours.

Switching on

Touch the **+** symbol or slide your finger to the right across control panel III until **int** appears in the display.

Note: After approx. 6 minutes, the extractor hood automatically switches back to fan setting 3.

Switching off

If you would like to stop intensive mode before the preset time expires, slide your finger to the left across control panel III to select the fan setting you require.

Lighting

The lighting can be switched on and off independently of the fan.

Touch the symbol.

Setting the brightness

Press and hold the symbol until the desired brightness is reached.

emotionLight Pro

The emotionLight Pro can be switched on and off independently of the fan.

Touch the symbol.

Setting the brightness

Press and hold the symbol until the required brightness is reached.

Setting the colour

1. Switch off the fan.
2. Touch the symbol.
3. Touch the **–** or **+** symbol until the colour you require is selected.

Boost function

Switching on

Touch the **b** symbol.

Note: After approximately 20 seconds, the extractor hood automatically switches back to the fan setting that was set beforehand.

Switching off

If you want to end the Boost function before the preset time expires, touch the **b** symbol.

powerBoost position

On some appliances, the glass front can be adjusted to an intermediate position (powerBoost position). The powerBoost position can be used for eliminating particularly strong cooking smells and large amounts of steam.

Take hold of the glass front in the centre and open it carefully.

Automatic mode

Switching on

- Touch the ⏻ symbol.
  The fan will start at setting 2.
- Touch the **auto** symbol.
  The optimum fan setting is set automatically using an air quality sensor.

Switching off

Touch the **auto** or ⏻ symbol to switch off automatic mode.

The fan will switch itself off automatically if the air quality sensor detects no further change in the air quality in the room.

Automatic mode can run for a maximum of four hours.

Sensor control

In automatic mode, an air quality sensor in the extractor hood detects the intensity of the cooking and roasting odours. Depending on the air quality sensor setting, the fan will switch itself to another fan setting automatically.

Possible sensor settings:

Default sensitivity setting: 3

Lowest sensitivity setting: 1

Highest sensitivity setting: 5

If the sensor controller responds too strongly or not enough, it can be changed accordingly:

1. Touch and hold the **auto** symbol for one second when the fan is switched off. The setting will be displayed.
2. Slide your finger across control panel III to change the sensor control setting.
3. Take your finger off the **auto** symbol.

Fan run-on time

Switching on

Note: If intensive mode has been activated, the run-on function will not be available.

Touch the – symbol until I→I lights up on the display panel.

The fan will run at fan setting 1.

After approximately 10 minutes, the fan will switch itself off automatically.

Switching off

Slide your finger to the right across control panel III until a fan setting lights up in the display.

This immediately stops fan run-on.

Saturation display

If the metal grease filters or activated charcoal filter are/ is saturated, the corresponding symbols will flash once the appliance has been switched off:

- **Metal grease filter:** ▩
- **Activated charcoal filter:** ↓↑
- **Metal grease filter and activated charcoal filter:** ▩ and ↓↑

If you have not yet done so, the metal grease filters should now be cleaned or the activated charcoal filter replaced. ⟶ *"Cleaning and maintenance" on page 13*

The saturation indicators can be reset while they are flashing. Slide your finger to the left across the control panel to do so.

Switching over the display for air recirculation mode

For air recirculation mode, the electronic controller must be switched over accordingly:

- The extractor hood must be connected and switched off.
- Touch and hold the ⏻ and **auto** symbols at the same time until "2" lights up for air recirculation mode (filters that cannot be regenerated).
- Repeatedly touching and holding this button combination makes "3" light up for air recirculation mode (filters that can be regenerated).
- Repeatedly pressing and holding this button combination switches the electronic controller back over to air extraction mode ("1").

Audible signal

Switching on

Touch and hold the ⏻ and **b** symbols at the same time for approximately 3 seconds when the fan is switched off. An audible signal will sound as an acknowledgement.

When the signal tone is activated, 1 will be lit.

Switching off

Touch and hold the ⏻ and **b** symbols at the same time for approximately 3 seconds when the fan is switched off. An audible signal will sound as an acknowledgement.

When the signal tone is deactivated, 0 will be lit.

Connecting to a hob

You can connect this appliance to a hob (if the hob supports connection to the appliance) and then control the functions of the hood via your hob.

Appliances can be connected to each other in different ways:

Home Connect

Two appliances can be connected using the Home Connect app provided that both of them are Home Connect compatible.

Refer to the Home Connect documents supplied for more information.

Connecting appliances directly

If the appliance is connected directly to a hob, it cannot be connected to your home network as well. The appliance will function as an extractor hood that is not connected to the network and you can continue to operate it via the control panel.

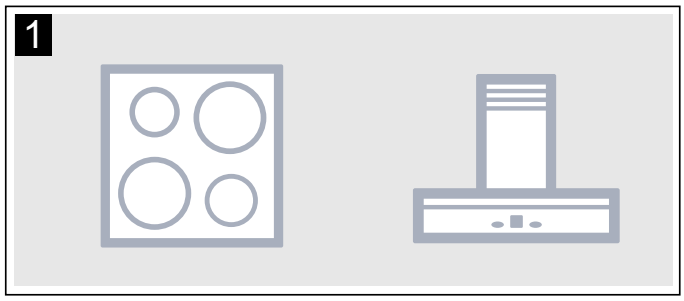

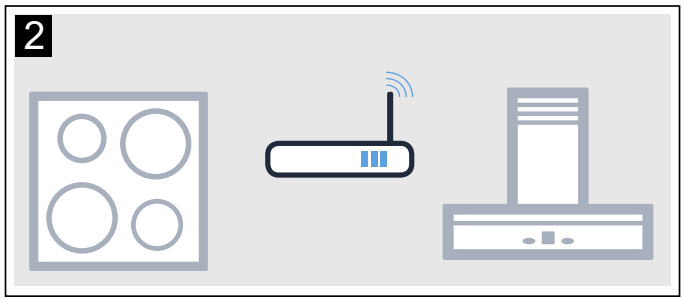

Connecting appliances via your home network

If the appliances are connected to each other via your home network, both the hood controls on the hob and Home Connect can be used to operate the appliance.

Notes

- Make sure you follow the safety instructions in the instruction manual for your extractor hood and that these are complied with even when operating the appliance via the hood controls on the hob.
- If the extractor hood is being operated by means of the controls on the hood itself, this mode of operation always has priority. It is not possible to use the hood controls on the hob during this time.

Setting up a connection

The hood must be switched off before you can connect the hob and extractor hood.

Connecting directly

Ensure that the hob is switched on and is in search mode.

To do this, refer to the section entitled "Connecting to the extractor hood" in the instruction manual for your hob.

Notes

- If your extractor hood is connected directly to the hob, it cannot be connected to your home network as well and you will not be able to use Home Connect.
- The hob must not be connected to your home network. To break a connection, follow the instructions in the section entitled "Resetting Home Connect".

Press and hold the b symbol until the ᯤ and – indicators start flashing.

The extractor hood has been connected to the hob when the ᯤ stops flashing and remains continuously lit.

Connecting via your home network

Follow the instructions in the section entitled "Automatic login to your home network" or "Manually logging into your home network" → *"Home Connect" on page 11*

Once the extractor hood is connected to your home network, you can connect to the hob via the Home Connect app. To do this. follow the instructions on your mobile device.

Home Connect

This appliance is Wi-Fi-capable and can be controlled using a mobile device.

If the appliance is not connected to your home network, it will function as an extractor hood with no network connection and can still be operated via the display.

The availability of the Home Connect function depends on the availability of Home Connect services in your country. Home Connect services are not available in every country.You can find more information on this at www.home-connect.com.

Notes

- Ensure that you follow the safety instructions in this instruction manual and that you comply with these even when you are away from home and are operating the appliance via the Home Connect app. You must also follow the instructions in the Home Connect app.
- If the appliance is being operated by means of the controls on the appliance itself, this mode of operation always has priority. During this time, it is not possible to operate the appliance using the Home Connect app.

Setting up

To implement settings via Home Connect, you must have installed and set up the Home Connect app on your mobile device.

Refer to the Home Connect documents supplied for more information.

Follow the steps specified by the app to implement the settings.

The app must be open in order to perform the set-up process.

Note: In the networked standby mode, your appliance requires a maximum of 2 W.

Automatic registration in the home network

Notes

- You require a router that has WPS functionality.
- You require access to your router. If you do not have this, follow the steps for "Manually logging into your home network".
- The extractor hood cannot be switched on during the connection process. You can cancel the process at any time by pressing the ⏻ symbol.
- To connect the extractor hood to your home network, the hood and the light must be switched off.

1. Press and hold the b symbol until the ᯤ and – indicators start flashing.
2. To start automatic login to your home network, swipe right over settings area ||| until ᯤ and 1 flash.
3. Press the WPS button on the router within the next 2 minutes.
   If the extractor hood has successfully connected, it will automatically connect to the Home Connect app. ᯤ and 3 will flash.

   Note: If the extractor hood has been unable to connect, it will automatically allow you to manually connect to your home network. ᯤ and 2 will flash. Log the appliance into your home network manually or swipe left over the settings area to try logging in automatically again.
4. On your mobile device, follow the instructions for automatic network login.

The login process is complete when the ᯤ indicator stops flashing on the control panel and remains continuously lit.

Manual registration in the home network

Notes

- The extractor hood cannot be switched on during the connection process. You can cancel the process at any time by pressing the ⏻ symbol.
- To connect the extractor hood to your home network, the hood and the light must be switched off.

1. Press and hold the b symbol until the ᯤ and – indicators start flashing.
2. To manually log into your home network, swipe right over settings area ||| until ᯤ and 2 flash.
3. Use the "Home Connect" SSID and the "Home Connect" key to log the mobile device into the extractor hood network.

   If the extractor hood has successfully connected, it will automatically connect to the Home Connect app. ᯤ and 3 will flash.
4. On your mobile device, follow the instructions for manually logging into your network.

The login process is complete when the ᯤ indicator stops flashing on the control panel and remains continuously lit.

Connecting to the app

If the Home Connect app is installed on your mobile device, you can connect it to your extractor hood.

Notes

- The appliance must be connected to the network.
- The app must be open.

1. Press and hold the b symbol until the ᯤ and 3 indicators start flashing.
2. On your mobile device, follow the instructions in the Home Connect app.

The connection process is complete when the ᯤ indicator stops flashing on the control panel and remains continuously lit.

Software update

Using the software update function, your extractor hood's software can be updated (e.g. for the purpose of optimisation, troubleshooting or security updates). To do this, you need to be a registered Home Connect user, have installed the app on your mobile device and be connected to the Home Connect server.

As soon as a software update is available, you will be informed through the Home Connect app and will be able to start the software update via the app.

Once the update has been successfully downloaded, you can start installing it via the Home Connect app if you are on your local area network.

The Home Connect app will inform you once installation is complete.

Notes

- You can continue to use your extractor hood as normal while updates are downloading.
- Depending on your personal settings in the app, software updates can also be set to download automatically.
- We recommend that you install security updates as soon as possible.

Resetting the connection

You can reset the connections you have saved on your home network and on Home Connect at any time.

Press and hold the **auto** and b symbols until the ᯤ symbol goes out. When the audible signal is switched on, an audible signal sounds.

About data protection

When your appliance is connected for the first time to a WLAN network, which is connected to the Internet, your appliance transmits the following categories of data to the Home Connect server (initial registration):

- Unique appliance identification (consisting of appliance codes as well as the MAC address of the installed WiFi communication module).
- Security certificate of the WiFi communication module (to ensure a secure IT connection).
- The current software and hardware version of your domestic appliance.
- Status of any previous resetting to factory settings.

This initial registration prepares the Home Connect functions for use and is only required when you want to use these Home Connect functions for the first time.

Note: Ensure that the Home Connect functions can be used only in conjunction with the Home Connect app. Information on data protection can be accessed in the Home Connect app.

Declaration of Conformity

BSH Hausgeräte GmbH hereby declares that the appliance which features Home Connect is in accordance with the basic requirements and the other relevant provisions of the directive 2014/53/EU.

A detailed RED Declaration of Conformity can be found online at banyo.co.uk on the product page of your appliance with the additional documents.

CE

Cleaning and maintenance

⚠ Warning
Risk of burns!
The appliance becomes hot during operation. Allow the appliance to cool down before cleaning.

⚠ Warning
Risk of electric shock!
Penetrating moisture may result in an electric shock. Clean the appliance using a damp cloth only. Before cleaning, pull out the mains plug or switch off the circuit breaker in the fuse box.

⚠ Warning
Risk of electric shock!
Do not use any high-pressure cleaners or steam cleaners, which can result in an electric shock.

⚠ Warning
Risk of injury!
Components inside the appliance may have sharp edges. Wear protective gloves.

⚠ Warning
Risk of injury!
Risk of trapping body parts when opening and closing the glass front. Do not reach into the area behind the glass panel, and keep your fingers away from the hinges.

Cleaning agents

To ensure that the different surfaces are not damaged by using the wrong cleaning product, follow the instructions in the table. Do not use any of the following:

- Harsh or abrasive cleaning agents, e.g. scouring powder or liquid scouring cleaner,
- Cleaning products with a high alcohol content,
- Hard scouring pads or cleaning sponges,
- Pressure washers or steam cleaners,
- Cleaning products that dissolve limescale,
- Aggressive all-purpose cleaning products,
- Oven spray.

Note: Wash new sponge cloths thoroughly before use.

Note: Follow all instructions and warnings included with the cleaning products.

Area	Cleaning products
Stainless steel	Hot soapy water: Clean with a dish cloth and then dry with a soft cloth. Clean stainless steel surfaces in the direction of the grain only. Special stainless steel cleaning products are available from our after-sales service or from specialist retailers.Apply a very thin layer of the cleaning product with a soft cloth.
Painted surfaces	Hot soapy water: Clean using a damp dish cloth and then dry with a soft cloth. Do not use stainless steel cleaner.
Aluminium and plastic	Hot soapy water: Clean with a soft cloth.
Glass	Glass cleaner: Clean with a soft cloth. Do not use a glass scraper.
Controls	Hot soapy water: Clean using a damp dish cloth and then dry with a soft cloth. Risk of electric shock caused by penetrating moisture. Risk of damage to the electronics caused by penetrating moisture. Never clean controls with a wet cloth. Do not use stainless steel cleaner.

Removing metal grease filter

1. Open the glass front slowly and fully. Hold the glass front in the centre when doing so, gripping it firmly.
2. Open the lock and swing down the metal grease filter. When you do this, take hold of the metal grease filter from underneath with your other hand.
3. Take the metal grease filter out of the holder.

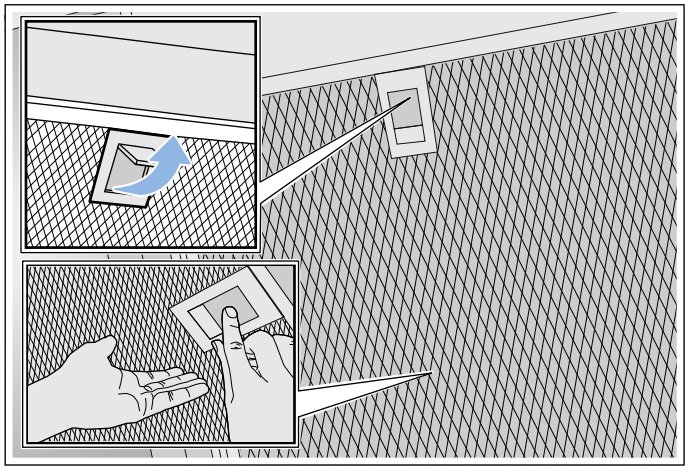

Notes
- Fat may accumulate in the bottom of the metal grease filter.
- Hold the metal grease filter level to prevent grease from dripping out.

Cleaning the metal mesh grease filters

These instructions apply to several appliance variants. It is possible that individual features are described which do not apply to your appliance.

⚠ Warning
Risk of fire!
Fatty deposits in the grease filter may catch fire. Regularly clean the grease filter. Never operate the appliance without a grease filter.

Notes

- Do not use aggressive, acidic or alkaline cleaning products.
- We recommend cleaning the grease filters every 2 months.
- When cleaning the metal grease filters, also clean the metal grease filter holder in the appliance using a damp cloth.
- The metal grease filters can be cleaned in the dishwasher or by hand.

By hand:

Note: You can use a special degreaser to remove stubborn dirt. This can be ordered from the online shop.

- Soak the metal grease filters in hot soapy water.
- Clean the filters with a brush and then rinse them thoroughly.
- Leave the metal grease filters to drain on an absorbent material.

In the dishwasher:

Note: Slight discolouration may occur if the metal grease filters are cleaned in the dishwasher. This discolouration has no effect on the performance of the metal grease filters.

- Use normal domestic dishwashing detergents.
- Do not clean heavily soiled metal grease filters together with cookware.
- Place the metal grease filters in the dishwasher, leaving plenty of space around them. Do not trap the metal grease filters.
- Select a temperature of no more than 50 °C.

Installing the metal mesh grease filter

⚠ Warning
Risk of injury!
Components inside the appliance may have sharp edges. Wear protective gloves.

Note: Clean all accessible parts of the housing.

1. Insert the metal grease filter and lock it in place. When you do this, take hold of the metal grease filter from underneath with your other hand.
   Note: Make sure that the metal grease filter is positioned correctly.
2. If the metal grease filter has not been inserted correctly, open the lock and reinsert the metal grease filter correctly.

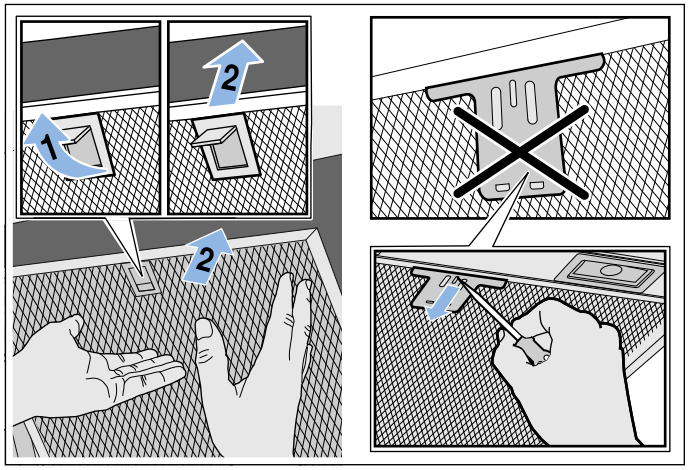

Trouble shooting

Malfunctions often have simple explanations. Please read the following notes before calling the after-sales service.

⚠ Warning
Risk of electric shock!
Incorrect repairs are dangerous. Repairs may only be carried out and damaged power cables replaced by one of our trained after-sales technicians. If the appliance is defective, unplug the appliance from the mains or switch off the circuit breaker in the fuse box. Contact the after-sales service.

Malfunction table

Problem	Possible cause	Solution
The appliance does not work	The plug is not plugged in.	Connect the appliance to the electricity supply
	Power cut	Check whether other kitchen appliances are working
	Faulty fuse	Check in the fuse box to make sure that the fuse for the appliance is OK
The lighting does not work.	The LED lights are defective.	Call the after-sales service.
The button illumination does not work.	The control unit is faulty.	Call the after-sales service.

LED lights

Defective LED lights may be replaced by the manufacturer, their customer service or a qualified technician (electrician) only.

⚠ Warning
Risk of injury!
The light emitted by LED lights is very dazzling, and can damage the eyes (risk group 1). Do not look directly into the switched on LED lights for longer than 100 seconds.

Customer service

When calling us, please quote the product number (E no.) and the production number (FD no.) so that we can provide you with the correct advice. These numbers can be found on the rating plate on the top of the appliance.

You can make a note of the numbers of your appliance and the telephone number of the after-sales service in the space below to save time should it be required.

E no.	**FD no.**
After-sales service ☏	

Please be aware that a visit by an after-sales engineer will be charged if a problem turns out to be the result of operator error, even during the warranty period.

Please find the contact data of all countries in the enclosed customer service list.

To book an engineer visit and product advice
GB 0344 892 8999
Calls charged at local or mobile rate.
IE 01450 2655
0.03 € per minute at peak. Off peak 0.0088 € per minute.

Rely on the professionalism of the manufacturer. You can therefore be sure that the repair is carried out by trained service technicians who carry original spare parts for your appliances.

Accessories

(not included in the scope of delivery)

Note: These instructions apply to several appliance models. It may be the case that an optional accessory that is listed does not apply for your appliance.

Note: Observe the installation instructions in the accessory.

Accessories	Order number
Starter set for air-recirculation mode (flat hood with chimney)	LZ10AFU00
Easy-change filter for starter set	LZ10AFA00
Starter set for air-recirculation mode (flat hood without chimney)	LZ10AFT00
Easy-change filter for starter set	LZ10AFA00
Starter set for air-recirculation mode (angled hood with chimney)	LZ10AKU00
Easy-change filter for starter set	LZ10AKA00
Starter set for air-recirculation mode (angled hood without chimney)	LZ10AKT00
Easy-change filter for starter set	LZ10AKA00
Starter set for air-recirculation mode with filter that can be regenerated (flat hood with chimney)	LZ10AFS00
Starter set for air-recirculation mode with filter that can be regenerated (angled hood with chimney)	LZ10AKS00
Starter set for air-recirculation mode with filter that can be regenerated (flat hood without chimney)	LZ10AFR00
Starter set for air-recirculation mode with filter that can be regenerated (angled hood without chimney)	LZ10AKR00
CleanAir air-recirculation module	LZ10AXC50
Easy-change filter for CleanAir air-recirculation module (cannot be regenerated)	LZ56200
Easy-change filter for CleanAir air-recirculation module (can be regenerated)	LZ00XXP00

INSTALLATION INSTRUCTIONS

- This appliance is installed on the wall.
- If the extractor hood is to be operated in exhaust-air mode, a flue duct must be fitted.
  If the extractor hood is to be operated in air-recirculation mode, an optional accessory must be fitted. To do this, refer to the installation instructions provided.The flue duct does not need to be fitted for air-recirculation mode.
- For additional optional accessories, refer to the installation instructions provided.
- The surfaces of the appliance are sensitive. Avoid damaging them during installation.

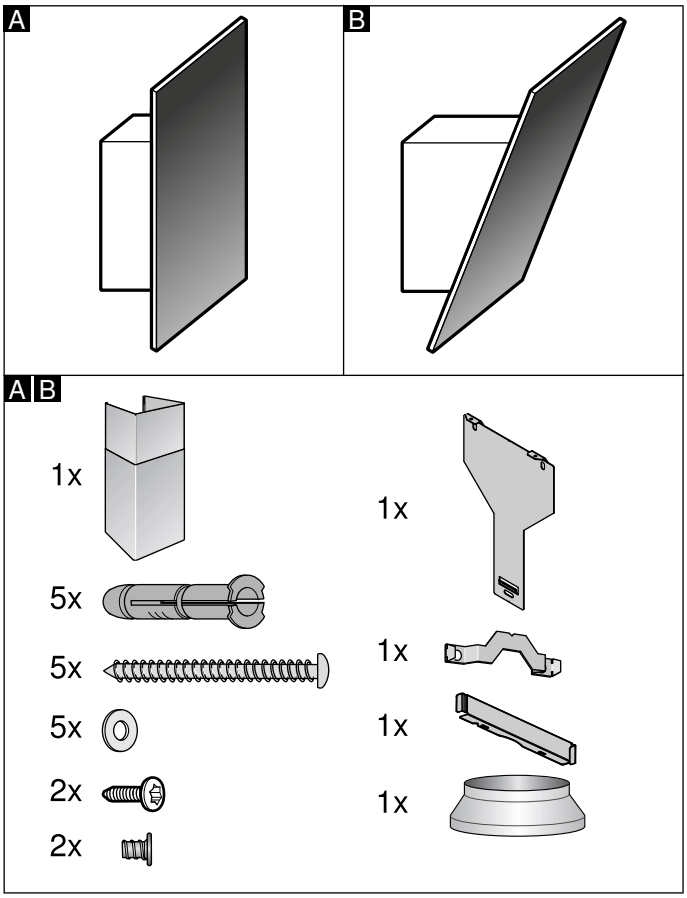

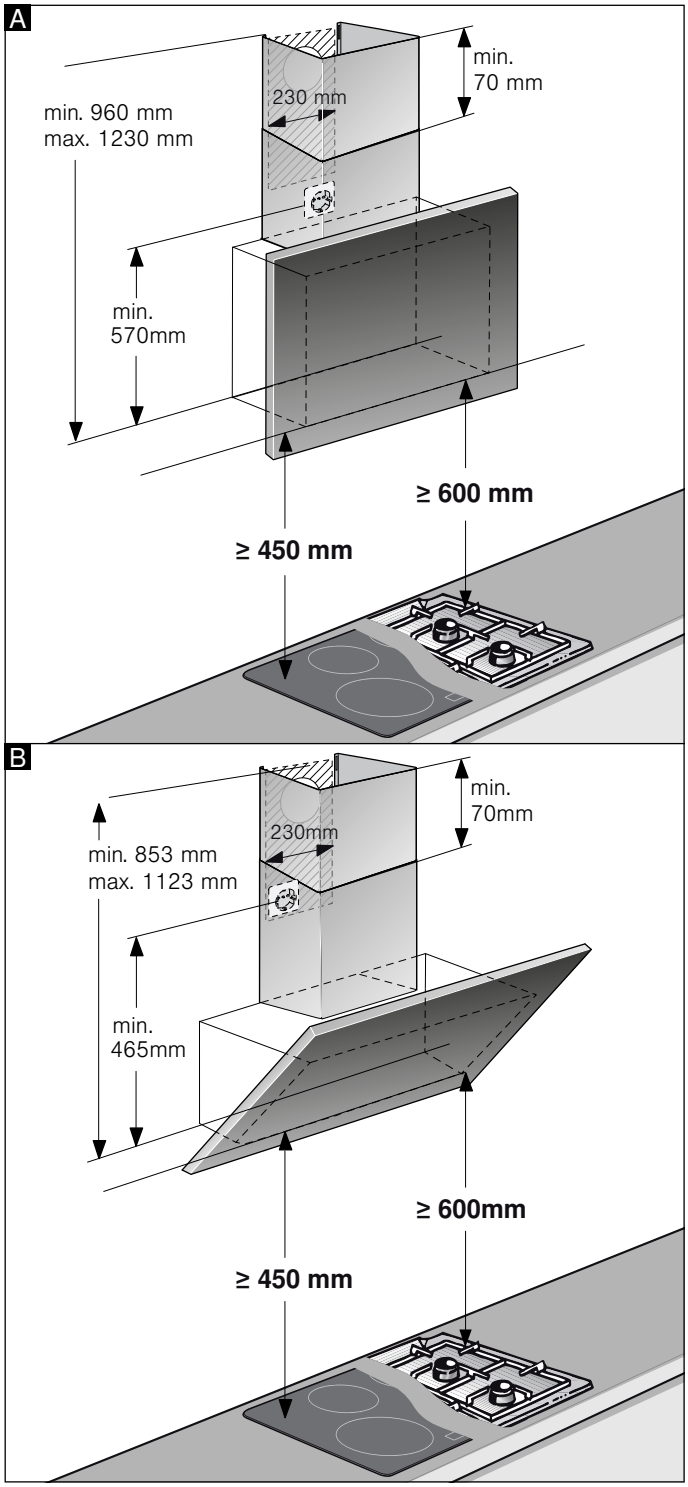

Note: We recommend fitting the appliance such that the lower edge of the glass screen is in line with the lower edges of the adjacent wall-hung cabinets. Make sure that the specified safety clearances from the hob are complied with.

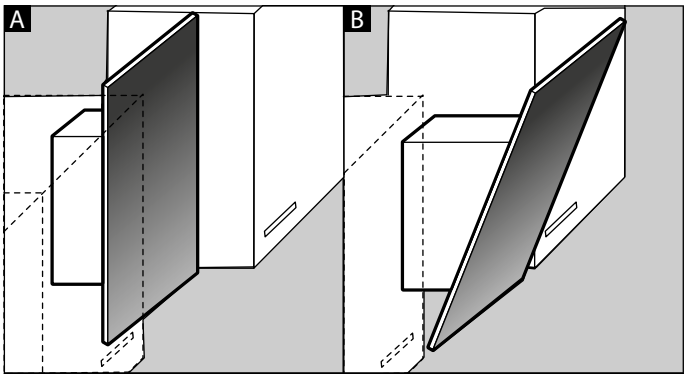

Important safety information

Read these instructions carefully. Only then will you be able to operate your appliance safely and correctly. Retain the instruction manual and installation instructions for future use or for subsequent owners.

Check the appliance for damage after unpacking it. Do not connect the appliance if it has been damaged in transport.

The appliance can only be used safely if it is correctly installed according to the safety instructions. The installer is responsible for ensuring that the appliance works perfectly at its installation location.

The surfaces of the appliance are easily damaged. Avoid damaging them during installation.

The width of the extractor hood must correspond at least with the width of the hob.

For the installation, observe the currently valid building regulations and the regulations of the local electricity and gas suppliers.

Warning
Risk of fire!

- Fatty deposits in the grease filter may catch fire. The specified safety clearances must be complied with in order to prevent a build-up of heat. Refer to the information provided for your cooker. If gas and electric hobs are being operated together, the largest specified clearance applies.
- Grease deposits in the grease filter may catch fire. Never work with naked flames close to the appliance (e.g. flambéing). Do not install the appliance near a heat-producing appliance for solid fuel (e.g. wood or coal) unless a closed, non-removable cover is available. There must be no flying sparks.

When conveying the exhaust air, official and legal regulations (e.g. state building regulations) must be followed.

⚠ Warning
Risk of death!
Risk of poisoning from flue gases that are drawn back in. The exhaust air must not be conveyed into a functioning smoke or exhaust gas flue or into a shaft which is used to ventilate installation rooms that contain heating appliances. If the exhaust air is to be conveyed into a non-functioning smoke or exhaust gas flue, you must obtain the consent of the heating engineer responsible.

⚠ Warning
Danger of death!
Risk of poisoning from flue gases that are drawn back in.

Always ensure adequate fresh air in the room if the appliance is being operated in exhaust air mode at the same time as room air-dependent heat-producing appliance is being operated.

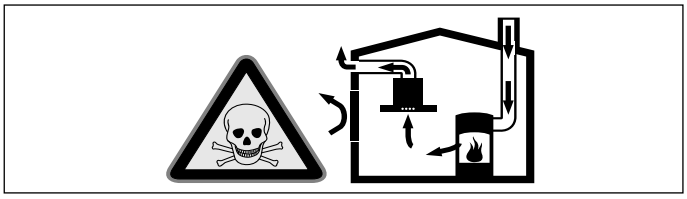

Room air-dependent heat-producing appliances (e.g. gas, oil, wood or coal-operated heaters, continuous flow heaters or water heaters) obtain combustion air from the room in which they are installed and discharge the exhaust gases into the open air through an exhaust gas system (e.g. a chimney).

In combination with an activated vapour extractor hood, room air is extracted from the kitchen and neighbouring rooms - a partial vacuum is produced if not enough fresh air is supplied. Toxic gases from the chimney or the extraction shaft are sucked back into the living space.

- Adequate incoming air must therefore always be ensured.
- An incoming/exhaust air wall box alone will not ensure compliance with the limit.

Safe operation is possible only when the partial vacuum in the place where the heat-producing appliance is installed does not exceed 4 Pa (0.04 mbar). This can be achieved when the air needed for combustion is able to enter through openings that cannot be sealed, for example in doors, windows, incoming/exhaust air wall boxes or by other technical means.

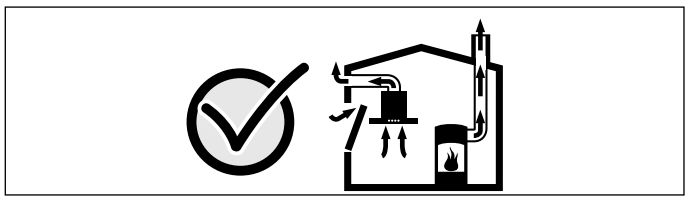

In any case, consult your responsible Master Chimney Sweep. He is able to assess the house's entire ventilation setup and will suggest the suitable ventilation measures to you.

Unrestricted operation is possible if the vapour extractor hood is operated exclusively in the circulating-air mode.

⚠ Warning
Danger of death!
Risk of poisoning from flue gases that are drawn back in. If installing a ventilation system in a room with a heat-producing appliance connected to a chimney/flue, the electricity supply to the hood must be equipped with a suitable safety switch.

⚠ Warning
Risk of injury!
- Components inside the appliance may have sharp edges. Wear protective gloves.
- The appliance may fall down if it has not been properly fastened in place. All fastening components must be fixed firmly and securely.
- The appliance is heavy. To move the appliance, 2 people are required. Use only suitable tools and equipment.
- Changes to the electrical or mechanical assembly are dangerous and may lead to malfunctions. Do not make any changes to the electrical or mechanical assembly.

⚠ Warning
Hazard due to magnetism!
Permanent magnets are inserted in the appliance front. They may affect electronic implants, e.g. heart pacemakers or insulin pumps. Wearers of electronic implants must stay at least 10 cm away from the appliance front.

⚠ Warning
Risk of electric shock!

- Components inside the appliance may have sharp edges. These may damage the connecting cable. Do not kink or pinch the connecting cable during installation.
- It must always be possible to disconnect the appliance from the power supply. The appliance must only be connected to a protective contact socket that has been correctly installed. If the plug can no longer be reached after installation, an energy-isolating device in the phases must be provided in the permanent electrical installation in accordance with the installation regulations. The permanent electrical installation must only be wired by a professional electrician. We recommend installing a residual-current circuit breaker (RCCB) in the appliance's power supply circuit.

⚠ Warning
Risk of electric shock!
Incorrect repairs are dangerous. Repairs may only be carried out and damaged power cables replaced by one of our trained after-sales technicians. If the appliance is defective, unplug the appliance from the mains or switch off the circuit breaker in the fuse box. Contact the after-sales service.

⚠ Warning
Danger of suffocation!
Packaging material is dangerous to children. Never allow children to play with packaging material.

General information

Checking the wall

- The wall must be level, vertical and adequately load-bearing.
- The depth of the bore holes must be the same length as the screws. The wall plugs must have a secure grip.
- The enclosed screws and wall plugs are suitable for solid brickwork. Suitable fasteners must be used for other structures (e.g. plasterboard, porous concrete, poroton bricks).
- The maximum weight of the extractor hood is **40 kg**.

Electrical connection

⚠ Warning
Risk of electric shock!
Components inside the appliance may have sharp edges. These may damage the connecting cable. Do not kink or pinch the connecting cable during installation.

The required connection information can be found on the rating plate on the top of the appliance.

Length of the cable: approx. 1.30 m

This appliance complies with the EC interference suppression regulations.

⚠ Warning
Risk of electric shock!
It must always be possible to disconnect the appliance from the power supply. The appliance must only be connected to a protective contact socket that has been correctly installed. If the plug can no longer be reached after installation, an energy-isolating device in the phases must be provided in the permanent electrical installation in accordance with the installation regulations. The permanent electrical installation must only be wired by a professional electrician. We recommend installing a residual-current circuit breaker (RCCB) in the appliance's power supply circuit.

Installation

Preparing for installation

Caution!
Ensure that there are no electrical wires, gas pipes or water pipes in the area where holes are to be drilled.

If the extractor hood is to be operated in exhaust-air mode, a flue duct must be fitted.

If the extractor hood is to be operated in air-recirculation mode, an optional accessory must be fitted. To do this, refer to the installation instructions provided. The flue duct does not need to be fitted for air-recirculation mode.

1. Determine where the extractor hood should be positioned and lightly mark where the lower edge of the appliance should be on the wall. Determine where the middle should be based on the hob.
   Note: We recommend fitting the extractor hood such that the lower edge of the glass screen is in line with the lower edges of the adjacent wall-hung cabinets. Make sure that the specified safety clearances from the hob are complied with.

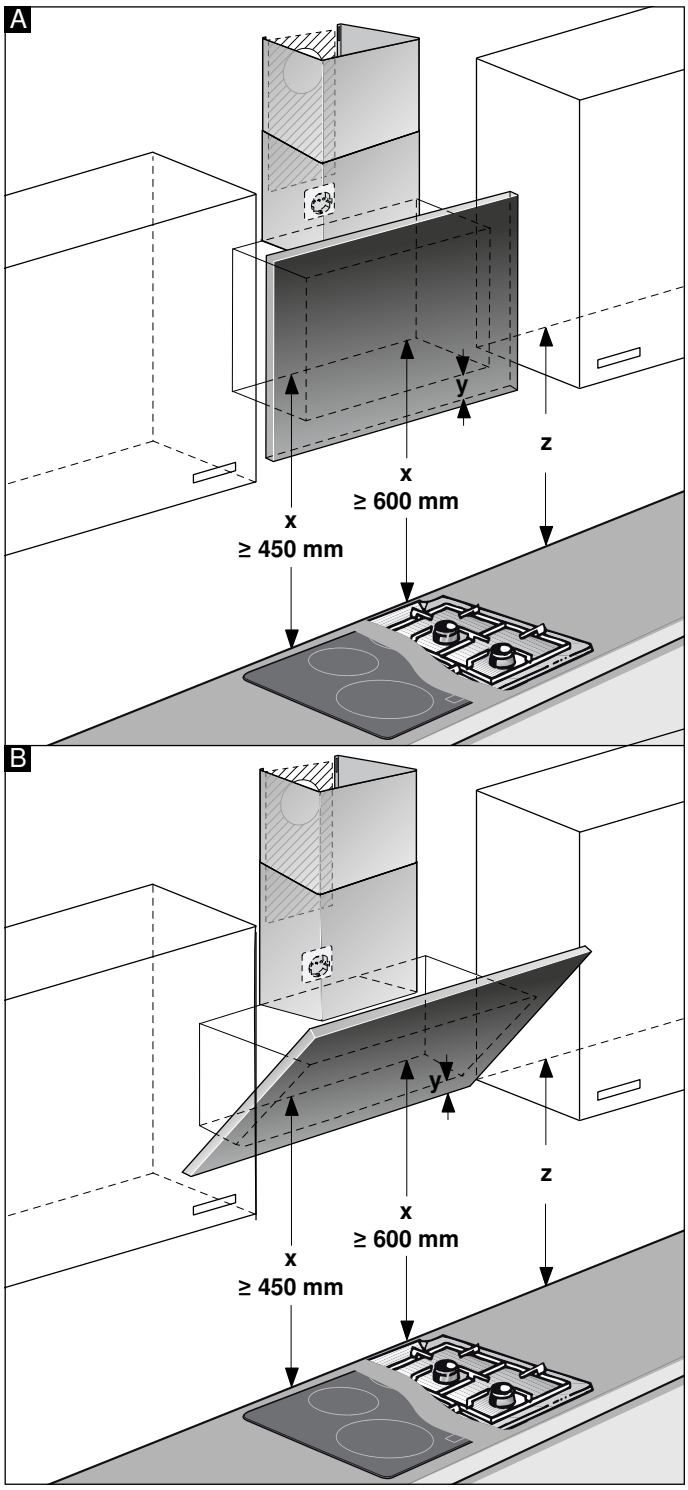

2. Place the template against the line drawn on the wall and fasten it in place. Mark where the screws should be inserted.
   To fit the flue duct, the template must be cut along the marked cut line.
3. Drill 8 mm diameter holes to a depth of 80 mm for fastening the appliance, remove the template and press in the wall plugs flush with the wall.

Fitting with a flue duct

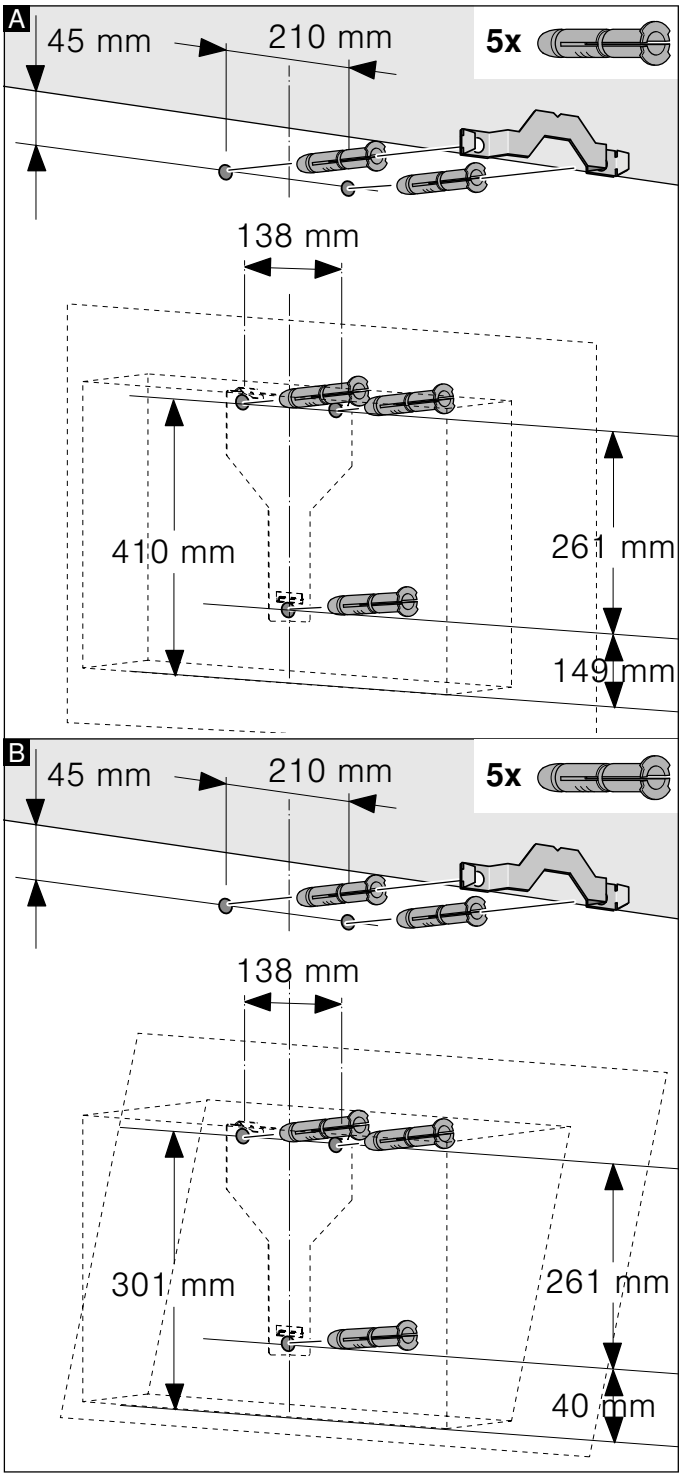

Fitting without a flue duct

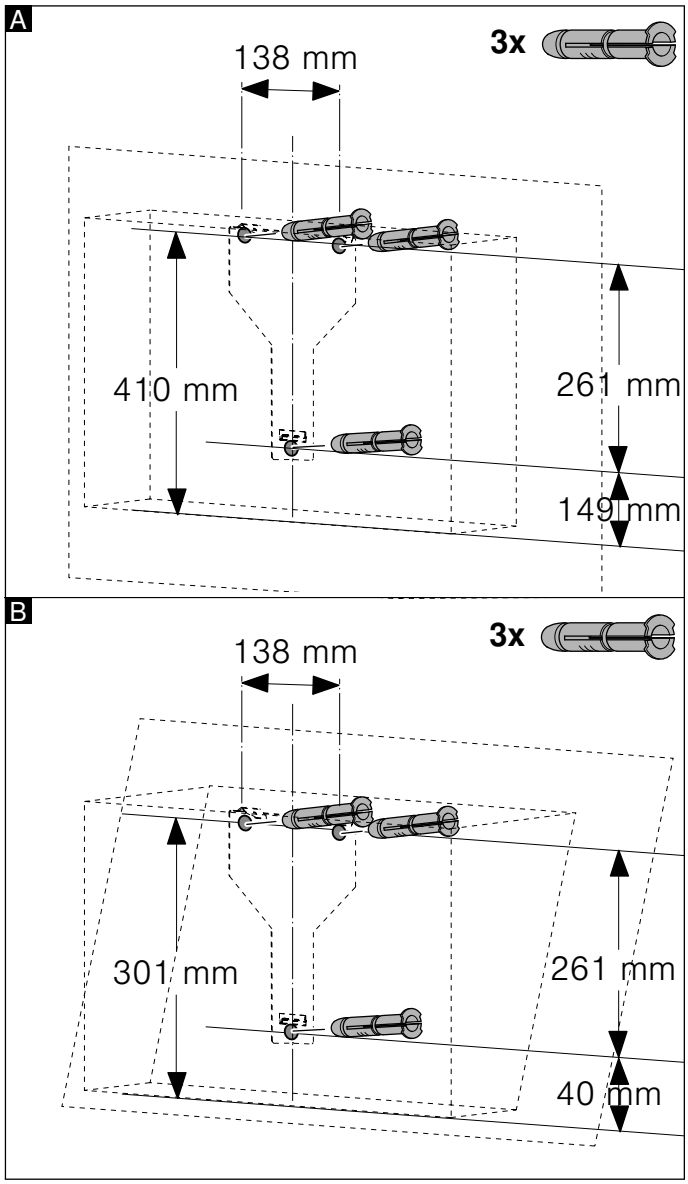

Installation

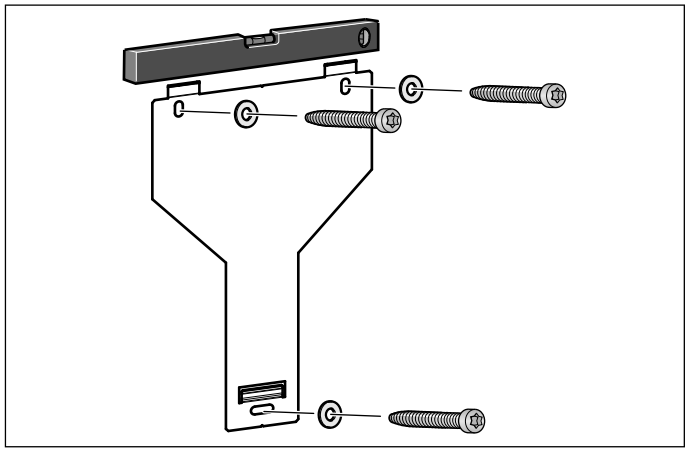

Screw in the mounting supports for the extractor hood until they are hand-tight, use a spirit level to level the appliance and then screw the mounting supports in fully.

Wall-mounting the appliance and levelling it

1. First remove the protective film from the back of the appliance and, following installation, remove the rest of the film.
2. When mounting the appliance, ensure that it engages properly with the mounting supports.
3. If required, the appliance can be moved to the right or to the left.
4. Firmly tighten the screws for the mounting supports. Hold the bracket firmly when doing so. A

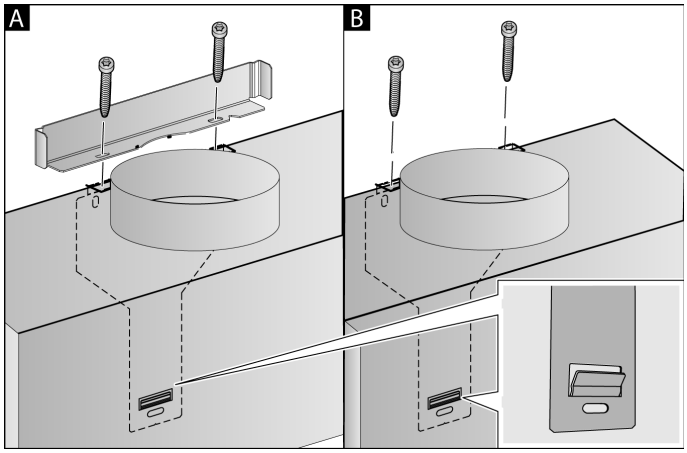

5. If no duct is to be fitted, screw in the two locking screws without the bracket. B

Connecting the pipes

If the extractor hood is to be operated in exhaust-air mode, the pipes must be connected. If the extractor hood is to be operated in air-recirculation mode, an optional accessory must be fitted. To do this, refer to the installation instructions provided.

Note: If an aluminium pipe is being used, smooth the connection area beforehand.

Exhaust air pipe, dia. 150 mm (recommended size)

Fit the exhaust air pipe directly to the air-pipe connector and seal the joint.

Exhaust air pipe, dia. 120 mm

1. Fit the reducing connector directly to the air-pipe connector.
2. Attach the exhaust air pipe to the reducing connector.
3. Use suitable means to seal both joints.

Attaching the flue duct

If the extractor hood is to be operated in exhaust-air mode, a flue duct must be fitted.

The flue duct does not need to be fitted for air-recirculation mode.

⚠ Warning
Risk of injury!
From sharp edges during installation. Always wear protective gloves while installing the appliance.

⚠ Warning
Risk of electric shock!
Components inside the appliance may have sharp edges. These may damage the connecting cable. Do not kink or pinch the connecting cable during installation.

1. Separate the flue duct sections by removing the adhesive tape.
2. Remove the pieces of protective film from both flue duct sections.
3. Push one flue duct section into the other.
   Notes
   – To prevent scratches, lay paper over the edges of the outer flue duct section to protect the surface.
   – The slots of the inner flue duct section point downwards.
4. Place flue ducts sections on the appliance.
5. Slide the inner flue duct section upwards, attach it to the left and right sides of the retaining bracket, and then slide it down to engage it. A
6. Screw the flue duct section to the sides of the retaining bracket using two screws. B

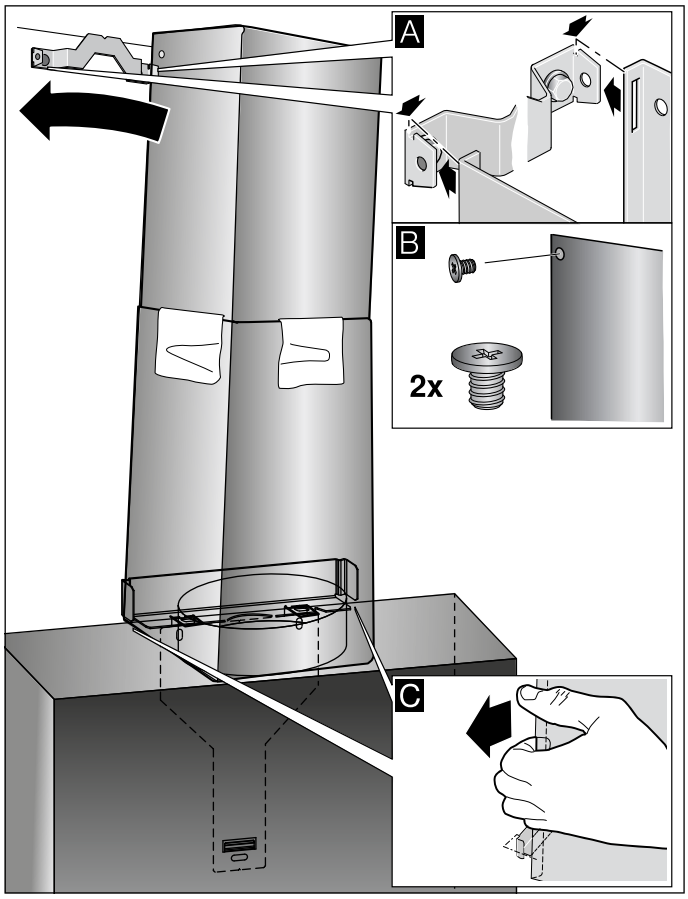

7. Clip the lower flue duct section in at the retaining bracket. The connection cable must not be damaged. C

Note: If an air-recirculation optional accessory has been fitted and the extractor hood is to be operated without a flue duct, the cable must be wound onto the connector.